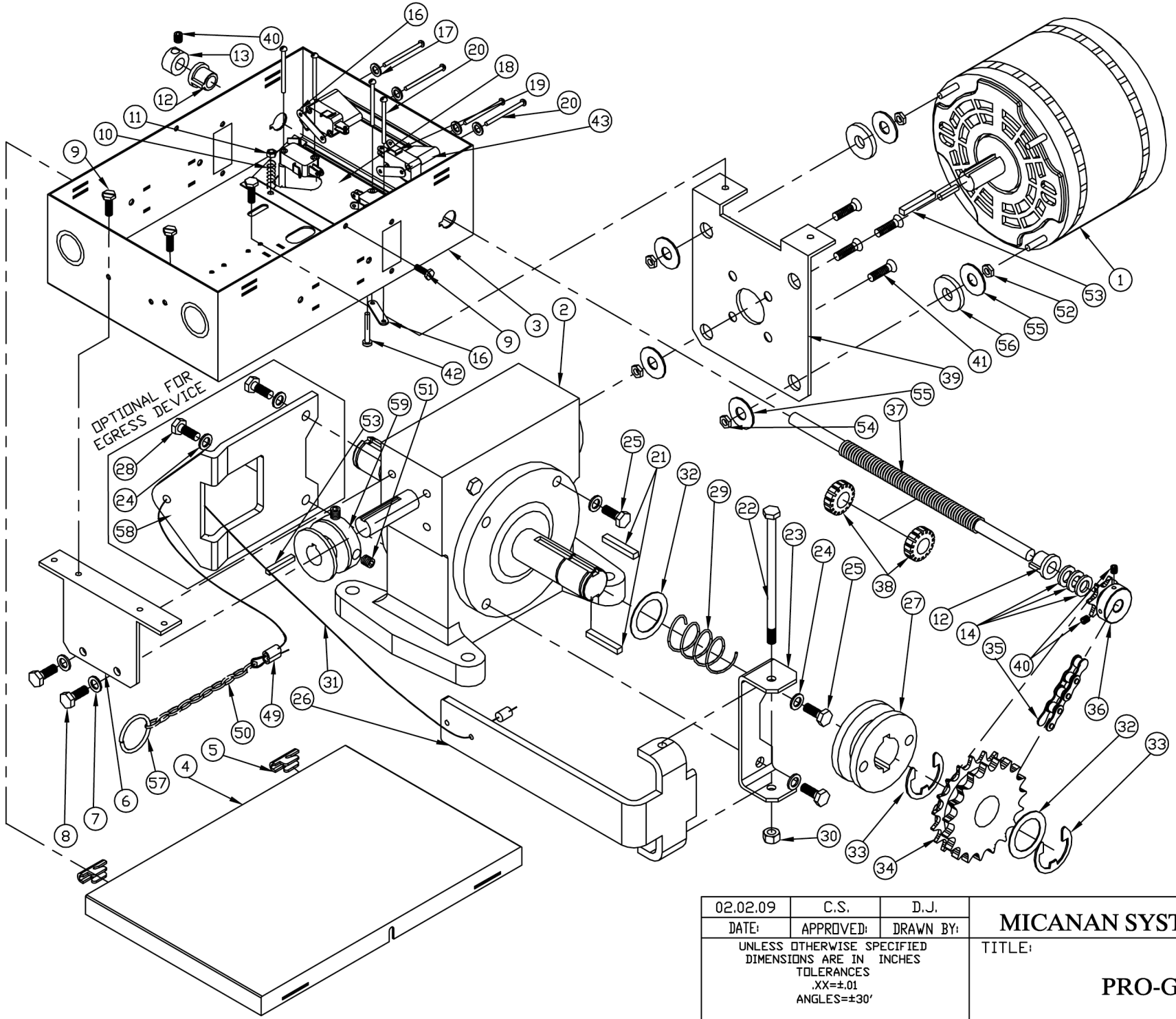

02.02.09	C.S.	D.J.	MICANAN SYSTEMS INC.
DATE:	APPROVED:	DRAWN BY:	
UNLESS OTHERWISE SPECIFIED DIMENSIONS ARE IN INCHES TOLERANCES .XX=±.01 ANGLES=±30'			TITLE: PRO-GJ
			WEIGHT: lb / SIZE: B / PAGE: 1/1
REVISION:A			CAD FILE: 3D-PRO-GJ-XE-RB / SCALE: 1:4

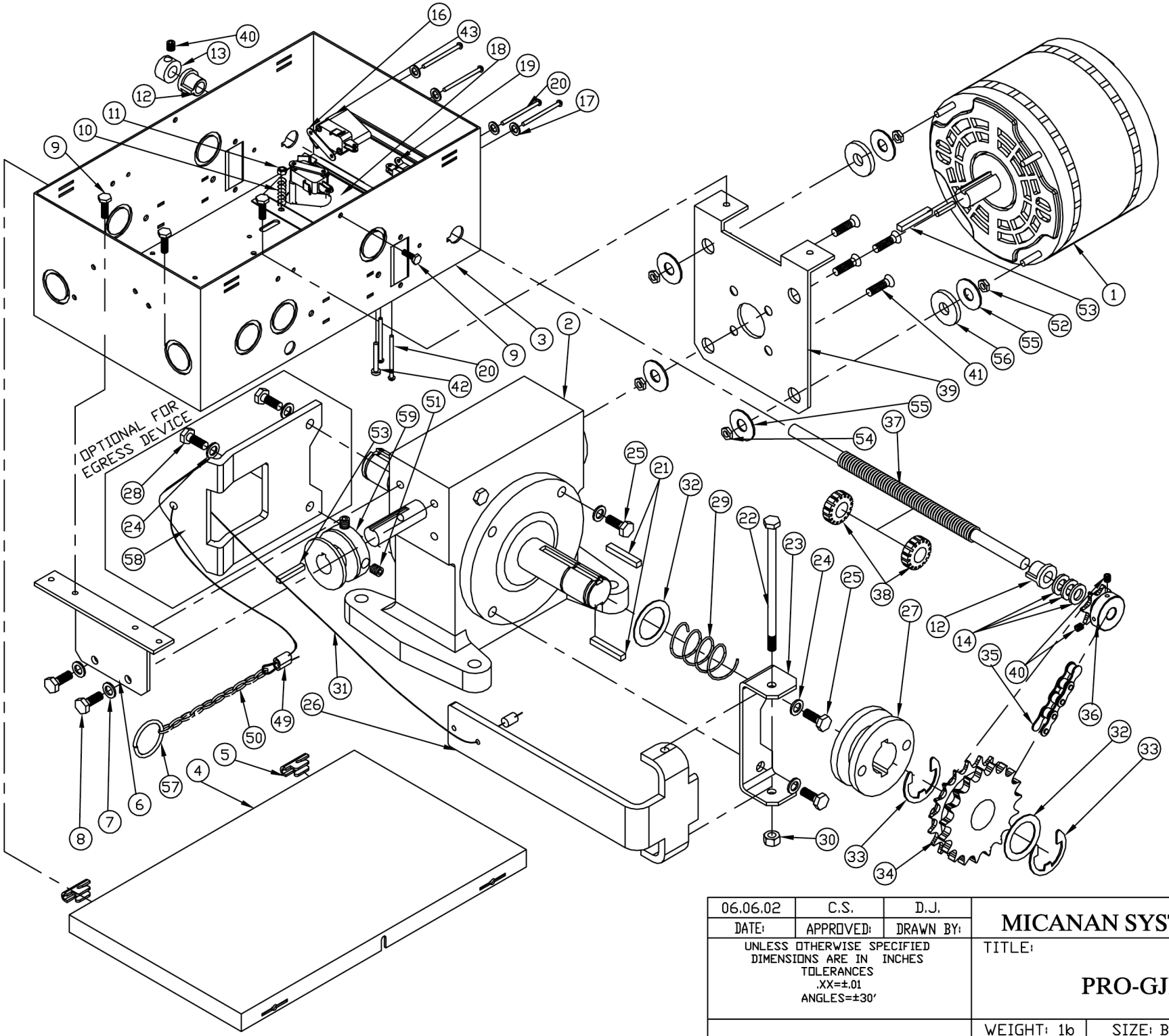

06.06.02	C.S.	D.J.	MICANAN SYSTEMS INC.
DATE:	APPROVED:	DRAWN BY:	
UNLESS OTHERWISE SPECIFIED DIMENSIONS ARE IN INCHES TOLERANCES .XX=±.01 ANGLES=±30'			TITLE: PRO-GJRW
			WEIGHT: lb / SIZE: B / PAGE: 1/1
REVISION:A			CAD FILE: 3D-PROGJRW-XE / SCALE: 1:4

CODE	PART #	DESCRIPTION (PRO-GJ (1-phase)/GJRW (3-phase))	QTY
MB01008	1	MOTOR 1/2HP	1
MC00026	2	GEAR REDUCER LSS 52 45:1	1
MM00142	3A	CONTROL BOX PRO-GJ MSI0155 **(For 1-phase operators)**	1 *
MM00256	3B	PRO-GJRW CONTROL BOX MSI0250 **(For 3-phase operators)**	1 *
MM00140	4A	CONTROL BOX COVER PRO-GJ MSI0156 **(For 1-phase operators)**	1 *
MM00257	4B	PRO-GJRW CONTROL BOX COVER MSI0251 **(For 3-phase operators)**	1 *
MM00046	5	CONTROL BOX HINGE	2
MM00141	6	REAR CONTROL BOX SUPPORT BRACKET PRO-GJ MSI0160	1
MG00015	7	LOCK WASHER 1/4"	2
MF00006	8	HEX HEAD BOLT 1/4-20UNC x 1/2" (Full thread)	2
MF00046	9	H.H. SLOTTED SELF ROUNDING WASHER HEAD SCREW 10-32 UNF x 1/2"	5
MO00002	10	CAM PLATE COMPRESSION SPRING (.178IDx.032GX.55L)	2
MG00007	11	HEX NYLON LOCK NUT 6-32UNC	2
MH00001	12	BRONZE T-BUSHING 3/8" ID	2
MH00006	13	COLLAR 3/8 ID	1
MG00124	14	FLAT WASHER PRO-GJ 3/8" ID x 5/8" OD x 1/16" TH	3
MG00003	16	DOUBLE NUT FOR LIM-SW.	4
MG00016	17	FLAT WASHER # 10	4
MM00024	18	CAM PLATE MSI0013	1
MK00004	19	LIMIT SWITCH (STANDARD)	4
MF00003	20	R.H. PHILLIPS MACHINE SCREW 4-40 UNCx1-1/2	8
ME00048	21	KEYWAY 1/4" SQ. X 3/4" LONG	2
MF00081	22	HEX HEAD BOLT 1/4-20UNCx4-1/2" (Not full thread)	1
MM00143	23	PIVOT SUPPORT U-PLATE (MSI0158)	1
MG00042	24	LOCK WASHER 5/16"	8
MF00035	25	HEX HEAD BOLT M8 X 20mm	6
MM00144	26	PRO-GJ DISCONNECT LEVER (MSI0157)	1
MI00022	27	COUPLING (PRO-GJ)	1
MF00104	28	HEX HEAD BOLT M8 X 25mm (**OPTIONAL**)	2
MO00016	29	DISCONNECT COMPRESSION SPRING (1.075" ID x 0.092GA x 1.25" LG)	1
MG00009	30	HEX NYLON LOCK NUT 1/4-20UNC	1
MR00001	31	DISCONNECT CABLE 3/32 X 12" LONG	1
MG00087	32	THRUST WASHER 1" ID	2
MG00085	33	C-CLIP 7/8 ID	2
MD00230	34	DOUBLE /SINGLE SPROCKET 41B19/410A19	1
MD00245	35	#410 LIMIT CHAIN 47LINK + 1 CON LINK	1
MD00231	36	SPROCKET 410B7 X 3/8" BORE 2SS	1
ME00035	37	LIMIT SHAFT LIGHT DUTY 3/8-1/2 x 8-1/2"	1
MG00030	38	LIMIT CAM 1/2-20 UNF	2
MM00145	39	FRONT SUPPORT BRACKET PRO-GJ (MSI0160)	1
MQ00009	40	SET SCREW 1/4"-20	3
MF00084	41	CHAMFER HEAD BOLT M6 X 20mm	4
MF00004	42	R.H. PHILLIPS MACHINE SCREW 6-32 UNC x1	2
MJ00006	43	LIMIT SWITCH DOUBLE OBLONG SPACER (PLASTIC) 3/4" LONG	4
MQ00011	49	3/32" ALUMINUM OVAL SLEEVE	1
MR00008	50	DISCONNECT SASH CHAIN	1
MQ00008	51	SET SCREW 5/16" -18	2
MG00063	52	HEX NUT 10-32UNF	4
ME00055	53	KEYWAY 3/16" X 1-3/4"	2
MG00010	54	RIBBED HEX NUT 10-32 UNF	4
MG00084	55	FLAT WASHER 1/4" ID OVERSIZE 1"OD	8
MG00086	56	RUBBER WASHER 1/4"ID x 1" OD	4
MU00002	57	KEYRING 1-1/4"	1
MM00247	58	GJ CABLE RELEASE (MSI0242) (**OPTIONAL**)	1
MI00018	59	MOTOR PULLEY 4L 5/8 ID	1